DATASHEET

STOCKED PRODUCT, READY FOR DELIVERY.

TWO YEAR WARRANTY

Portable MEMS Inclinometer Systems

Direct from site connection

send data live via FTP, email or API

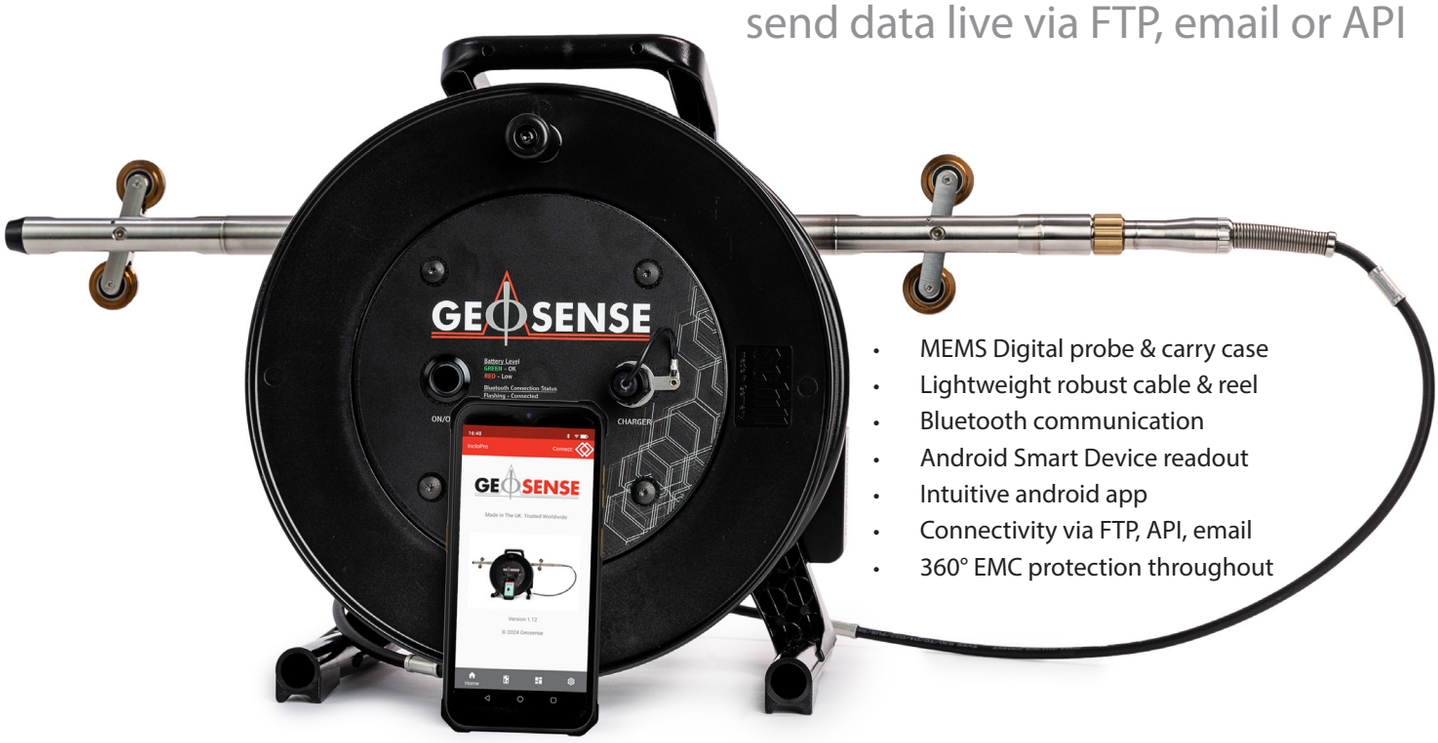

- MEMS Digital probe & carry case
- Lightweight robust cable & reel
- Bluetooth communication
- Android Smart Device readout
- Intuitive android app
- Connectivity via FTP, API, email
- 360° EMC protection throughout

GEOSENSE

Portable MEMS Inclinometer

Overview

The Geosense Portable Inclinometer system utilises modern communication and Smart devices to enable the tilt data generated by the probe to be managed, stored and transferred directly from site via FTP, API, email or other communication platforms.

The system comprises a slimline detachable probe, a lightweight robust elongation-resistant cable, lightweight reel with Bluetooth communication to the smart android readout device, with a user-friendly app, plus storage and carry cases for all components.

The probe is fitted with industry standard MEMS biaxial sensors together with a signal conditioning board allowing the calibration factors to be stored within the probe. A digital output signal via the reel is sent to the Smart android device where it is converted to engineering units.

The multi-stranded high tensile fibre yarn reinforced cable with depth markers have been designed and tested with weight up to 40 kg to ensure their long-term stability.

To ensure data is not compromised by electro-magnetic interference and thus become inaccurate, even on noisy sites, the system has been designed and fitted with full 360 degree EMC protection within the probe, cable and reel and is fully tested in accordance with CE and FCC requirements.

APPLICATIONS

- Dams & embankments
- Retaining walls & deep excavations
- Slopes & embankments
- Tunnels & shafts
- Bridges
- Ground improvement

USED TO MONITOR

- Lateral displacement of soil or rock
- Lateral displacement of diaphragm walls
- Lateral displacement of retaining walls
- Lateral displacement of dam cores
- Downstream face of rock filled dams
- Settlement & heave under tanks

FEATURES

- Direct from-site live data transfer
- Fast stable readings
- Data export CSV and RPP formats
- Robust MEMS sensor
- High accuracy
- Auto & manual reading options
- Android-based operating system
- Probes and reels are interchangeable
- Bluetooth connection - auto mating of device & reel
- Strain resistant cable with swaged cable marks
- IP68 (20 bar) rated

Portable Vertical MEMS Inclinometer

Specifications

RANGE	
Full Scale Range	±30° from vertical
PROBE	
Sensor type	Biaxial MEMS
Sensor accuracy	±0.004° (±13.5 arc sec, ±0.07 mm/m) ±0.0125% FS
Sensor resolution	0.0005° (2 arc sec, 0.01 mm/m) 0.0017% FS
Sensor repeatability	±0.002° (±7.2 arc sec, ±0.037 mm/m) ±0.007% FS
Output signal	RS-485 Digital BUS
Output unit	Sine of angle
Probe gauge length	500mm
Probe diameter	25mm
Probe length	680mm
Probe length (including connector)	800mm
Probe weight	1.32kg
Enclosure rating	IP68 (24 bar)
Materials	316 stainless steel,
Probe carry case dimensions	725 x 200 x 105mm
Probe carry case weight	5.6kg
CABLE	
Diameter	7.5mm
Weight	5.8kg/100m
Minimum break load	400kgf
Restraining member	Vectran® Multi-strand high tensile yarn
Jacket	Polyurethane
Depth markers	Every 500mm
Lengths	30, 50, 75, 100, 150m (other available on request)
Connector	Piston & face seal with robust stainless steel alignment keyway (30 bar rated)

Portable Horizontal MEMS Inclinometer

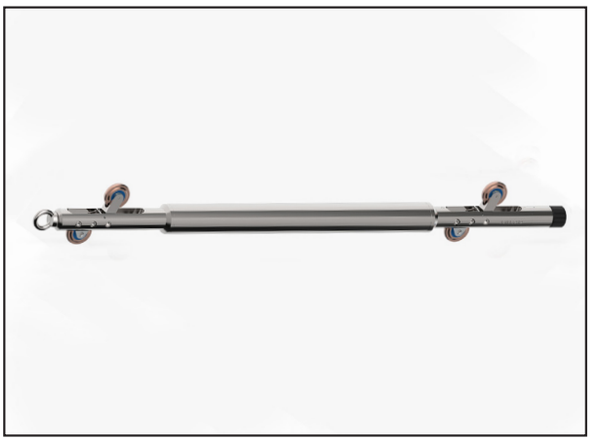

The Geosense Horizontal Portable Inclinometer system is used to measure settlement and/or heave within a horizontal borehole under structures such as embankments, dams, roadways, storage tanks and lanfills.

The system differs from the vertical model in that it has a fixed bottom wheel to eliminate the possibility of eronious readings due to the effect of gravity on the probe in the horizontal position.

Specifications

RANGE		
Full Scale Range	±30° from horizontal	
PROBE		
Sensor type	Uniaxial MEMS	
Sensor accuracy	±0.004° (±13.5 arc sec, ±0.07 mm/m) ±0.0125% FS	
Sensor resolution	0.0005° (2 arc sec, 0.01 mm/m) 0.0017% FS	
Sensor repeatability	±0.002° (±7.2 arc sec, ±0.037 mm/m) ±0.007% FS	
Output signal	RS-485 Digital BUS	
Output unit	Sine of angle	
Probe gauge length	500mm	1000mm
Probe diameter	35mm	35mm
Probe length	680mm	1254mm
Probe length (including connector)	800mm	1372mm
Probe weight	1.9kg	2.583kg
Enclosure rating	IP68 (24 bar)	
Materials	316 stainless steel	
Probe carry case dimensions	725 x 200 x 105mm	
Probe carry case weight	5.6kg	

Portable Inclined MEMS Inclinometer

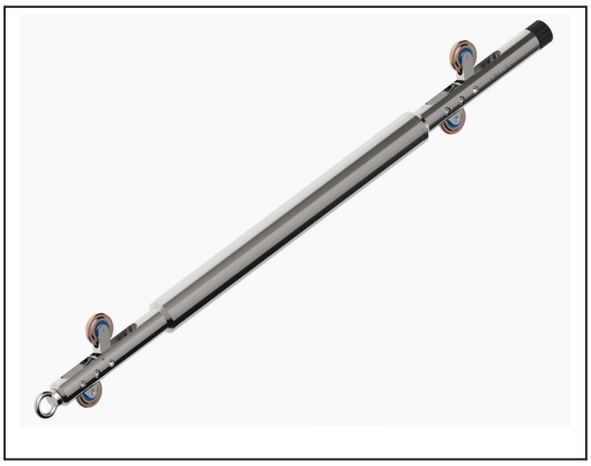

The Geosense Inclined Portable Inclinometer system is used to measure lateral movements and deformations of soil, rock and reatining structures within or on an inclined borehole or surface. Typical applications include monitoring the downstream face of concrete faced rock-filled dams.

The system differs from the vertical model in that it has a fixed bottom wheel to eliminate the possibility of eronious readings due to the effect of gravity on the probe in the inclined position.

For deep installations, an additional weight may need to be added to the bottom of the probe to overcome the possible effects of friction and the weight of the cable.

Specifications

RANGE	
Full Scale Range	±30° from 35° from horizontal
PROBE	
Sensor type	Biaxial MEMS
Sensor accuracy	±0.004° (±13.5 arc sec, ±0.07 mm/m) ±0.0125% FS
Sensor resolution	0.0005° (2 arc sec, 0.01 mm/m) 0.0017% FS
Sensor repeatability	±0.002° (±7.2 arc sec, ±0.037 mm/m) ±0.007% FS
Output signal	RS-485 Digital BUS
Output unit	Sine of angle
Probe gauge length	500mm
Probe diameter	35mm
Probe length	680mm
Probe length (including connector)	800mm
Probe weight	1.9kg
Enclosure rating	IP68 (24 bar)
Materials	316 stainless steel,
Probe carry case dimensions	725 x 200 x 105mm
Probe carry case weight	5.6kg

Specifications

CABLE REEL & CARRY BAG	
Communication	Bluetooth low energy
Enclosure rating	IP65
Power supply	Ni-MH 12V 2500mAh rechargeable batteries
Operating time	Minimum 15 hours continuous
Material	Polycarbonate
30 to 50m cable diameter	310mm
75 to 100m cable diameter	380mm
30m cable weight	6.30kg (including carry case)
50m cable weight	7.58kg (including carry case)
75m cable weight	9.88kg (including carry case)
100m cable weight	11.23kg (including carry case)
SYSTEM	
Total system accuracy	± 3mm/30m (within 3° from vertical)
Total system repeatability	± 1mm/30m
Display units	mm
Readout data export	CSV (Sine alpha & mm) & RPP
Operating temperature	-40 to +80°C
COMPLIANCE	
RED	
Article 3.1(a) : Electrical Safety	BS EN 61010 -1:2010+A1:2019
Article 3.1(a): EMF exposure	BS EN IEC 62479:2010
Article 3.1(b): EMC	EN 301 489 -1 V2.2.3 EN 301 489 -17: V3.2.4
Article 3.2: Radio Spectrum use	EN 300 328: V2.2.2
FCC	
FCC Part 15B	
FCC Part 15C	
RoHS	
BS EN IEC 63000:2018	

Portable MEMS Inclinometer Software

IncloPRO App

The IncloPRO app allows the user to take readings, visualise various plots and send data form site via FTP, API, email etc.

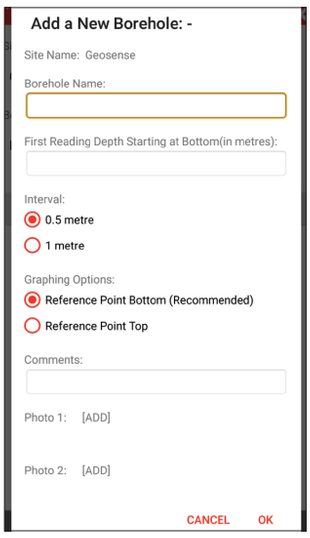

Wizard guides you through setting up sites & boreholes.

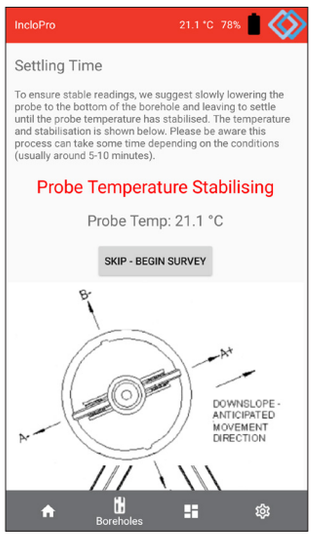

Step-by-step guide to ensure correct survey methodology is carried out.

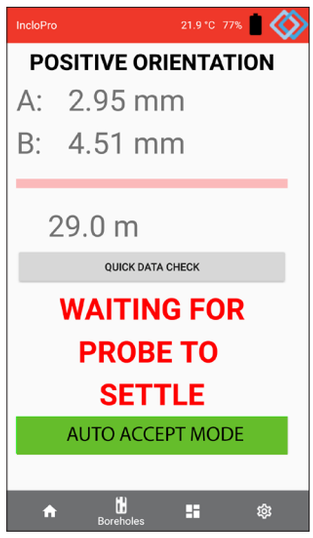

Auto mode provides handsfree automated data recording which ensures consistency & quality of surveys.

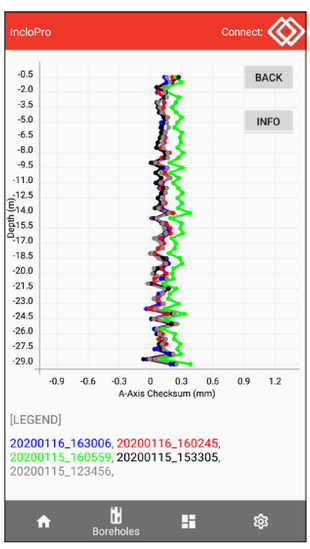

Checksum, cumulative displacement, incremental displacement, mean deviation & absolute position graphs can all be viewed.

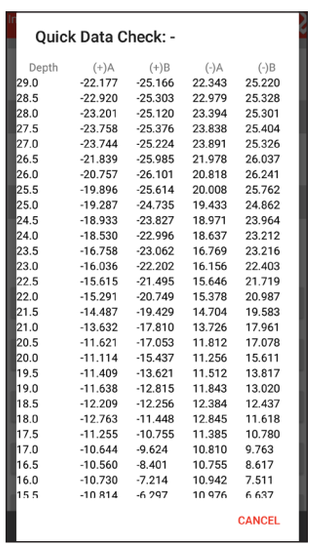

Depth	(+)A	(+)B	(-)A	(-)B
29.0	-22.177	-25.166	22.343	25.220
28.5	-22.920	-25.303	22.979	25.328
28.0	-23.201	-25.120	23.394	25.301
27.5	-23.758	-25.376	23.838	25.404
27.0	-23.744	-25.224	23.891	25.326
26.5	-21.839	-25.985	21.978	26.037
26.0	-20.757	-26.101	20.818	26.241
25.5	-19.896	-25.614	20.008	25.762
25.0	-19.287	-24.735	19.433	24.862
24.5	-18.933	-23.827	18.971	23.964
24.0	-18.530	-22.996	18.637	23.212
23.5	-16.758	-23.062	16.769	23.216
23.0	-16.036	-22.202	16.156	22.403
22.5	-15.615	-21.495	15.646	21.719
22.0	-15.291	-20.749	15.378	20.987
21.5	-14.487	-19.429	14.704	19.583
21.0	-13.632	-17.810	13.726	17.961
20.5	-11.621	-17.053	11.812	17.078
20.0	-11.114	-15.437	11.256	15.611
19.5	-11.409	-13.621	11.512	13.817
19.0	-11.638	-12.815	11.843	13.020
18.5	-12.209	-12.256	12.384	12.437
18.0	-12.763	-11.448	12.845	11.618
17.5	-11.255	-10.755	11.385	10.780
17.0	-10.644	-9.624	10.810	9.763
16.5	-10.560	-8.401	10.755	8.617
16.0	-10.730	-7.214	10.942	7.511
15.5	-10.814	-6.297	10.976	6.637

Quick data check available during the survey to highlight any problems.

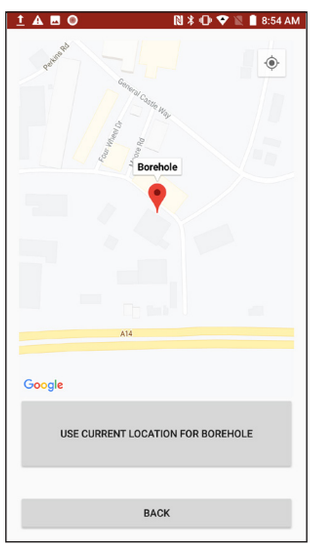

Borehole location can be set using GPS coordinates.

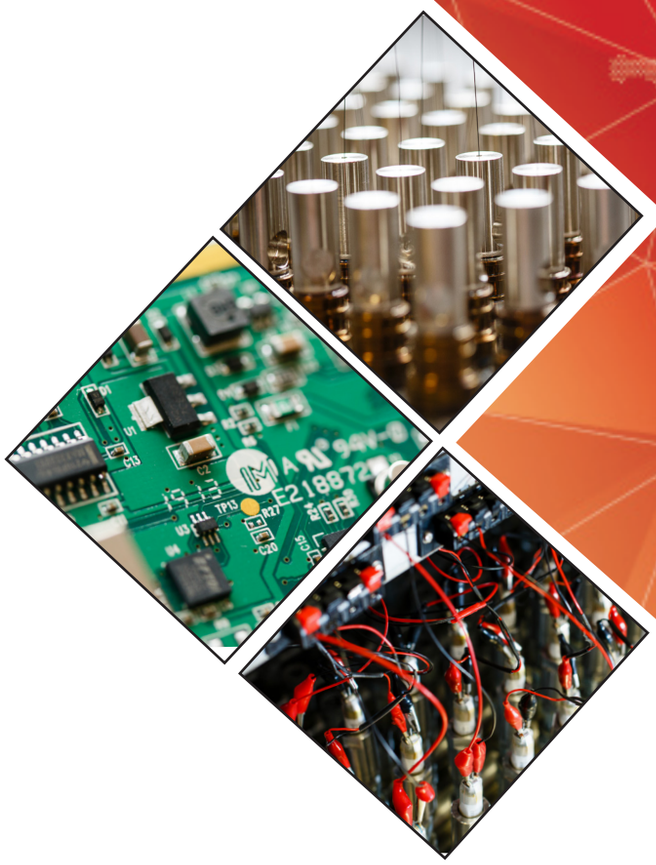

HEAD OFFICE

Nova House
Rougham Industrial Estate
Rougham, Bury St Edmunds
Suffolk IP30 9ND
England

+44 (0)1359 270457
sales@geosense.com
support@geosense.com

NORTH AMERICA OFFICE

15 West 38th Street
Suite 632
New York
NY 10018

+1 518-920-3483
sales@geosense.com
support@geosense.com

www.geosense.com

Specifications are subject to change without notice and should not be construed as a commitment by Geosense. Geosense assumes no responsibility for any errors that may appear in this document. In no event shall Geosense be liable for incidental or consequential damages arising from the use of this document or the systems described in this document. All Content published or distributed by Geosense is made available for the purposes of general information. You are not permitted to publish our content or make any commercial use of our content without our express written consent. This material or any portion of this material may not be reproduced, duplicated, copied, sold, resold, edited, or modified without our express written consent.

V1.12 08/2026